Balkan Championships for cadets, 2.-3.june, 2018, Bihać – BIH

Team Result,

Cadets Girls	**-44,-48,-52,-57,-63,-70,**				*Cadets Boys*	**-50,-55,-60,-66,-73,**			
		golden	**silver**	**bronze**			**golden**	**silver**	**bronze**
	Bosnia-Herzegovina			3		Bosnia-Herzegovina	1		4
	Bulgaria		1			Bulgaria		2	2
	Greece			4	**3.**	**3. Greece**	1	1	4
	Macedonia					Macedonia			
	3. Montenegro		1	3		Montenegro			2
	2. Romania	4	2	3	**4---1.**	**1. Romania**	3	2	2
	1. Turkey	4	3	2	**1---2.**	**2. Turkey**	3	2	2
	Kosovo		1			Kosovo		1	

BALKAN JUDO ASSOCIATION
Deniz ŞİLLİ
General Secretary

Balkan Championships for cadets 2.3.June.2018 Bihac, BIH W -40 kg

Competitors

Competitors: 5

#	Name	Grade	Club	1	2	3	4	5	Wins	Pts	Pos
1	Doga Sevgi SUREN	?	Turkey			10			1	10	4
2	Ceren KANYILMAZ	?	Turkey	1		10			2	11	3
3	Angela BOROVCANIN	?	Macedonia						0	0	5
4	Georgia HAGIANU	?	Romania	10	10	10		10	4	40	1
5	Ana Maria VLADU	?	Romania	10	10	10			3	30	2

Matches

Match	White			Blue	Result	Time
1	Georgia HAGIANU	4	5	Ana Maria VLADU	10-0	0:00
2	Doga Sevgi SUREN	1	2	Ceren KANYILMAZ	0-1	0:00
3	Angela BOROVCANIN	3	4	Georgia HAGIANU	0-10	0:00
4	Doga Sevgi SUREN	1	5	Ana Maria VLADU	0-10	0:00
5	Ceren KANYILMAZ	2	3	Angela BOROVCANIN	10-0	0:00
6	Doga Sevgi SUREN	1	4	Georgia HAGIANU	0-10	0:00
7	Angela BOROVCANIN	3	5	Ana Maria VLADU	0-10	0:00
8	Ceren KANYILMAZ	2	4	Georgia HAGIANU	0-10	0:00
9	Doga Sevgi SUREN	1	3	Angela BOROVCANIN	10-0	0:00
10	Ceren KANYILMAZ	2	5	Ana Maria VLADU	0-10	0:00

Results

Pos	Name
1	Georgia HAGIANU, Romania
2	Ana Maria VLADU, Romania
3	Ceren KANYILMAZ, Turkey
4	Doga Sevgi SUREN, Turkey
5	Angela BOROVCANIN, Macedonia

BALKAN JUDO ASSOCIATION
Deniz ŞILLI
General Secretary

Balkan Championships for cadets 2.3.June.2018 Bihac, BIH W -44 kg

Competitors A

Competitors: 8

#	Name	Grade	Club	1	2	3	4	Wins	Pts	Pos
1	Ivana NIKOLIĆ	?	Montenegro		1	10	10	3	21	1
2	Andra Raluca NOROCEA	?	Romania			10		1	10	3
3	Ekaterini MPALTIDI	?	Greece					0	0	4
4	Asli TURAN	?	Turkey		10	10		2	20	2

Matches A

Match	White			Blue	Result	Time
1	Ivana NIKOLIĆ	1	2	Andra Raluca NOROCEA	1-0	0:00
3	Ekaterini MPALTIDI	3	4	Asli TURAN	0-10	0:00
5	Ivana NIKOLIĆ	1	3	Ekaterini MPALTIDI	10-0	0:00
7	Andra Raluca NOROCEA	2	4	Asli TURAN	0-10	0:00
9	Ivana NIKOLIĆ	1	4	Asli TURAN	10-0	0:00
11	Andra Raluca NOROCEA	2	3	Ekaterini MPALTIDI	10-0	0:00

Competitors B

#	Name	Grade	Club	5	6	7	8	Wins	Pts	Pos
5	Ane Marie BREBINARU	?	Romania		10		10	2	20	2
6	Nina KOSTOVA	?	Bulgaria					0	0	4
7	Hanife OZCAN	?	Turkey	1	10		10	3	21	1
8	Odeta BAJRAKTARI	?	Kosovo		10			1	10	3

Matches B

Match	White			Blue	Result	Time
2	Ane Marie BREBINARU	5	6	Nina KOSTOVA	10-0	0:00
4	Hanife OZCAN	7	8	Odeta BAJRAKTARI	10-0	0:00
6	Ane Marie BREBINARU	5	7	Hanife OZCAN	0-1	0:00
8	Nina KOSTOVA	6	8	Odeta BAJRAKTARI	0-10	0:00
10	Ane Marie BREBINARU	5	8	Odeta BAJRAKTARI	10-0	0:00
12	Nina KOSTOVA	6	7	Hanife OZCAN	0-10	0:00

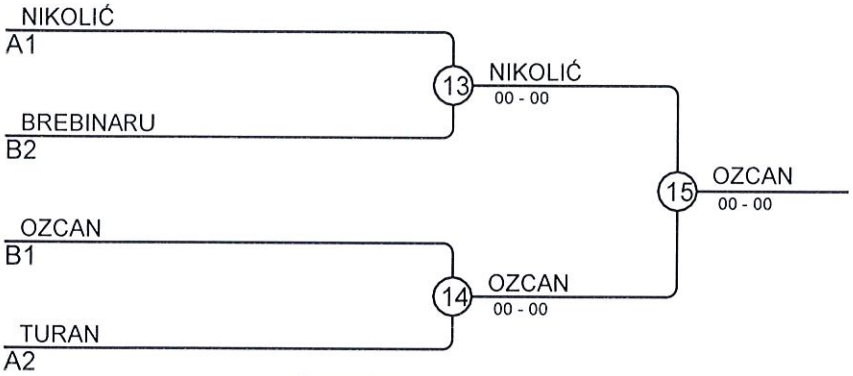

Results

Pos	Name
1	Hanife OZCAN, Turkey
2	Ivana NIKOLIĆ, Montenegro
3	Ane Marie BREBINARU, Romania
3	Asli TURAN, Turkey

BALKAN JUDO ASSOCIATION
Deniz ŞILLI
General Secretary

Balkan Championships for cadets 2.3.June.2018 Bihac, BIH W -48 kg

Competitors: 8

Competitors A

#	Name	Grade	Club	1	2	3	4	Wins	Pts	Pos
1	Ana UJDUR	?	Bosnia and Herzegovina					0	0	4
2	Iasmina Giorgiana COVACIU	?	Romania	10			10	2	20	2
3	Aleyna ADAK	?	Turkey	10	1		10	3	21	1
4	Christina MATZIARA	?	Greece	10				1	10	3

Matches A

Match	White			Blue	Result	Time
1	Ana UJDUR	1	2	Iasmina Giorgiana COVACIU	0-10	0:00
3	Aleyna ADAK	3	4	Christina MATZIARA	10-0	0:00
5	Ana UJDUR	1	3	Aleyna ADAK	0-10	0:00
7	Iasmina Giorgiana COVACIU	2	4	Christina MATZIARA	10-0	0:00
9	Ana UJDUR	1	4	Christina MATZIARA	0-10	0:00
11	Iasmina Giorgiana COVACIU	2	3	Aleyna ADAK	0-1	0:00

Competitors B

#	Name	Grade	Club	5	6	7	8	Wins	Pts	Pos
5	Gordana ILIĆ	?	Bosnia and Herzegovina		10			1	10	3
6	Teodora RISTESKA	?	Macedonia					0	0	4
7	Anita GRUJIČIĆ	?	Montenegro	1	10			2	11	2
8	Carmen SZATMARY	?	Romania	10	10	1		3	21	1

Matches B

Match	White			Blue	Result	Time
2	Gordana ILIĆ	5	6	Teodora RISTESKA	10-0	0:00
4	Anita GRUJIČIĆ	7	8	Carmen SZATMARY	0-1	0:00
6	Gordana ILIĆ	5	7	Anita GRUJIČIĆ	0-1	0:00
8	Teodora RISTESKA	6	8	Carmen SZATMARY	0-10	0:00
10	Gordana ILIĆ	5	8	Carmen SZATMARY	0-10	0:00
12	Teodora RISTESKA	6	7	Anita GRUJIČIĆ	0-10	0:00

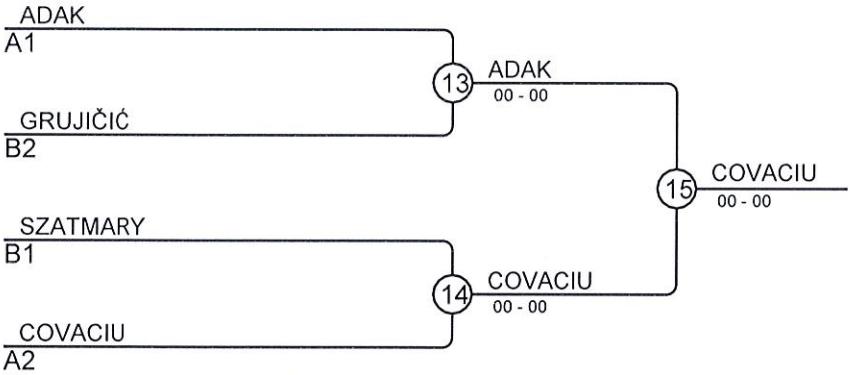

Results

Pos	Name
1	Iasmina Giorgiana COVACIU, Romania
2	Aleyna ADAK, Turkey
3	Anita GRUJIČIĆ, Montenegro
3	Carmen SZATMARY, Romania

BALKAN JUDO ASSOCIATION
Deniz ŞILLI
General Secretary

Balkan Championships for cadets 2.3.June.2018 Bihac, BIH W -52 kg

Competitors: 10

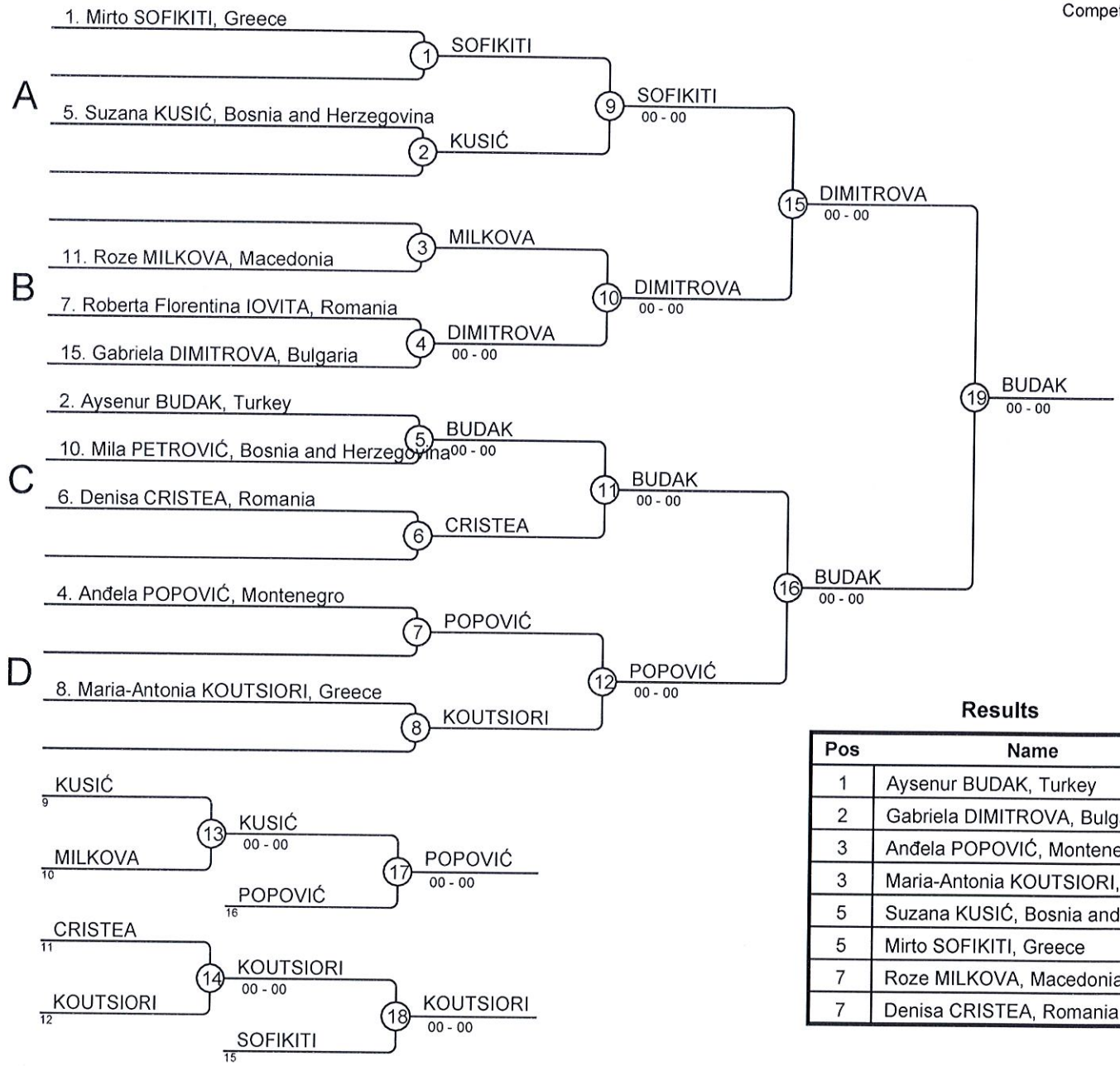

Results

Pos	Name
1	Aysenur BUDAK, Turkey
2	Gabriela DIMITROVA, Bulgaria
3	Anđela POPOVIĆ, Montenegro
3	Maria-Antonia KOUTSIORI, Greece
5	Suzana KUSIĆ, Bosnia and Herzegovina
5	Mirto SOFIKITI, Greece
7	Roze MILKOVA, Macedonia
7	Denisa CRISTEA, Romania

BALKAN JUDO ASSOCIATION
Deniz ŞİLLİ
General Secretary

Balkan Championships for cadets 2.3.June.2018 Bihac, BIH W -57 kg

Competitors: 12

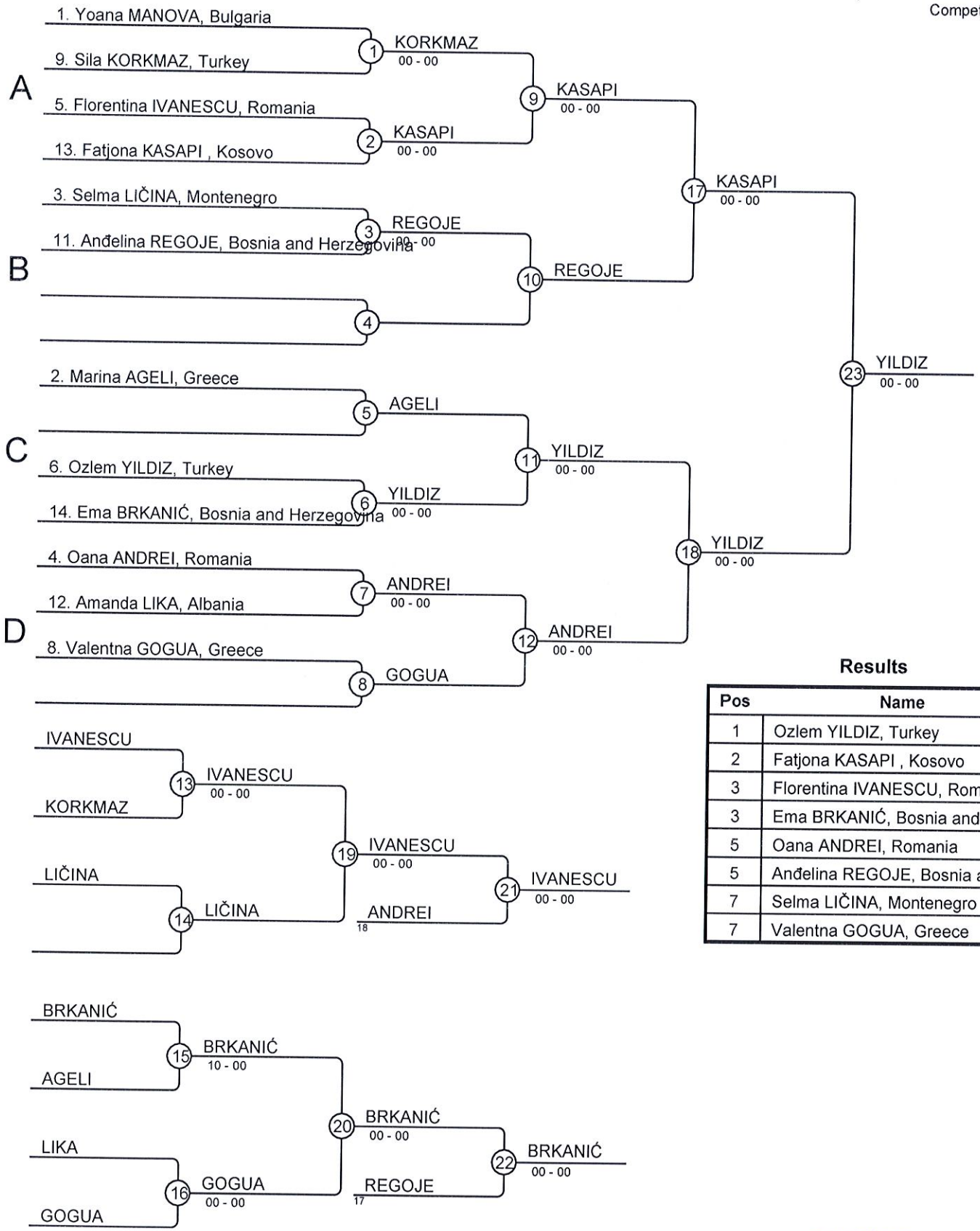

Results

Pos	Name
1	Ozlem YILDIZ, Turkey
2	Fatjona KASAPI , Kosovo
3	Florentina IVANESCU, Romania
3	Ema BRKANIĆ, Bosnia and Herzegovina
5	Oana ANDREI, Romania
5	Anđelina REGOJE, Bosnia and Herzegovir
7	Selma LIČINA, Montenegro
7	Valentna GOGUA, Greece

BALKAN JUDO ASSOCIATION
Deniz ŞİLLİ
General Secretary

Balkan Championships for cadets 2.3.June.2018 Bihac, BIH W+70 kg

Competitors: 11

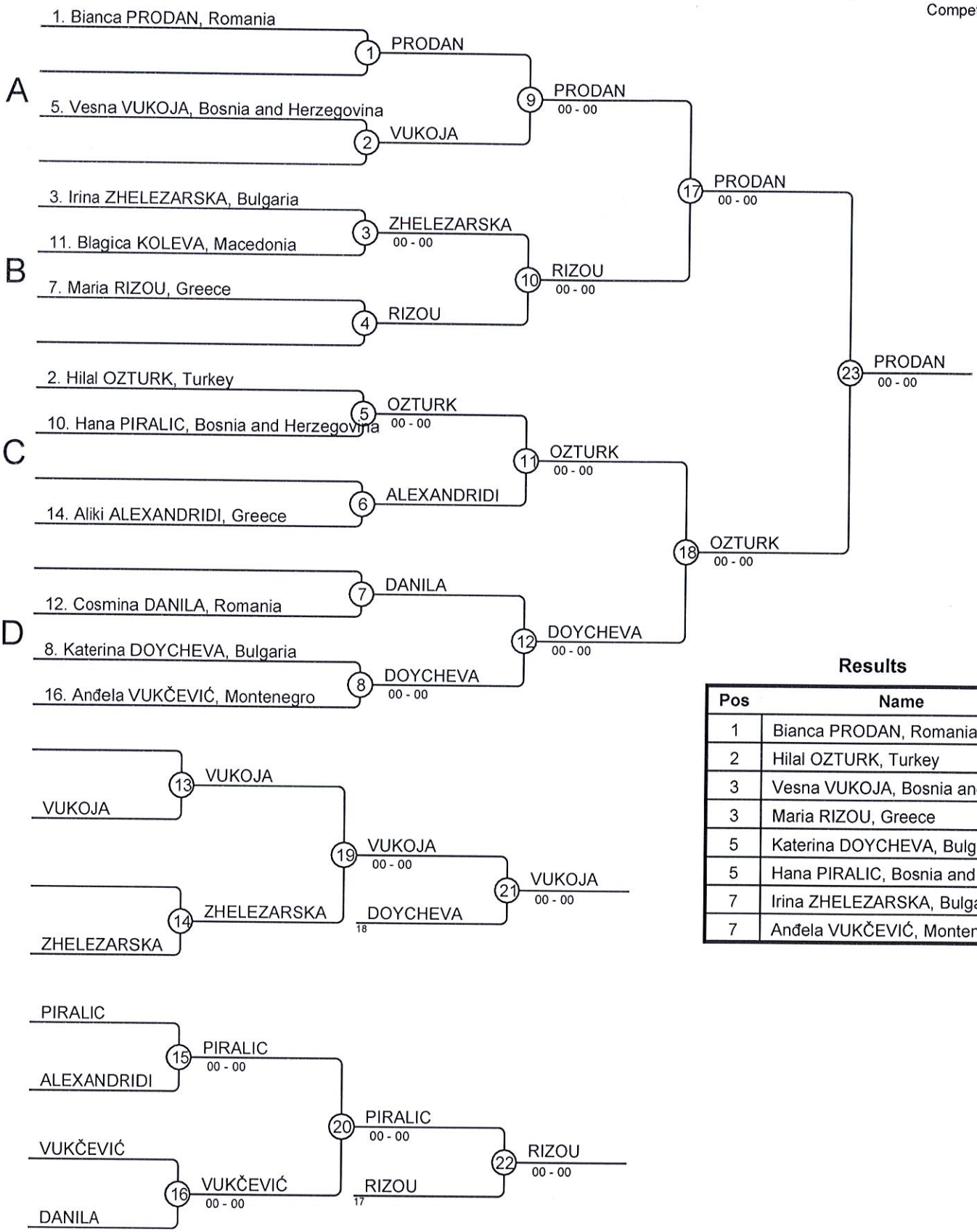

Results

Pos	Name
1	Bianca PRODAN, Romania
2	Hilal OZTURK, Turkey
3	Vesna VUKOJA, Bosnia and Herzegovina
3	Maria RIZOU, Greece
5	Katerina DOYCHEVA, Bulgaria
5	Hana PIRALIC, Bosnia and Herzegovina
7	Irina ZHELEZARSKA, Bulgaria
7	Anđela VUKČEVIĆ, Montenegro

BALKAN JUDO ASSOCIATION
Deniz ŞİLLİ
General Secretary

Balkan Championships for cadets 2.3.June.2018 Bihac, BIH M -50 kg

Competitors: 14

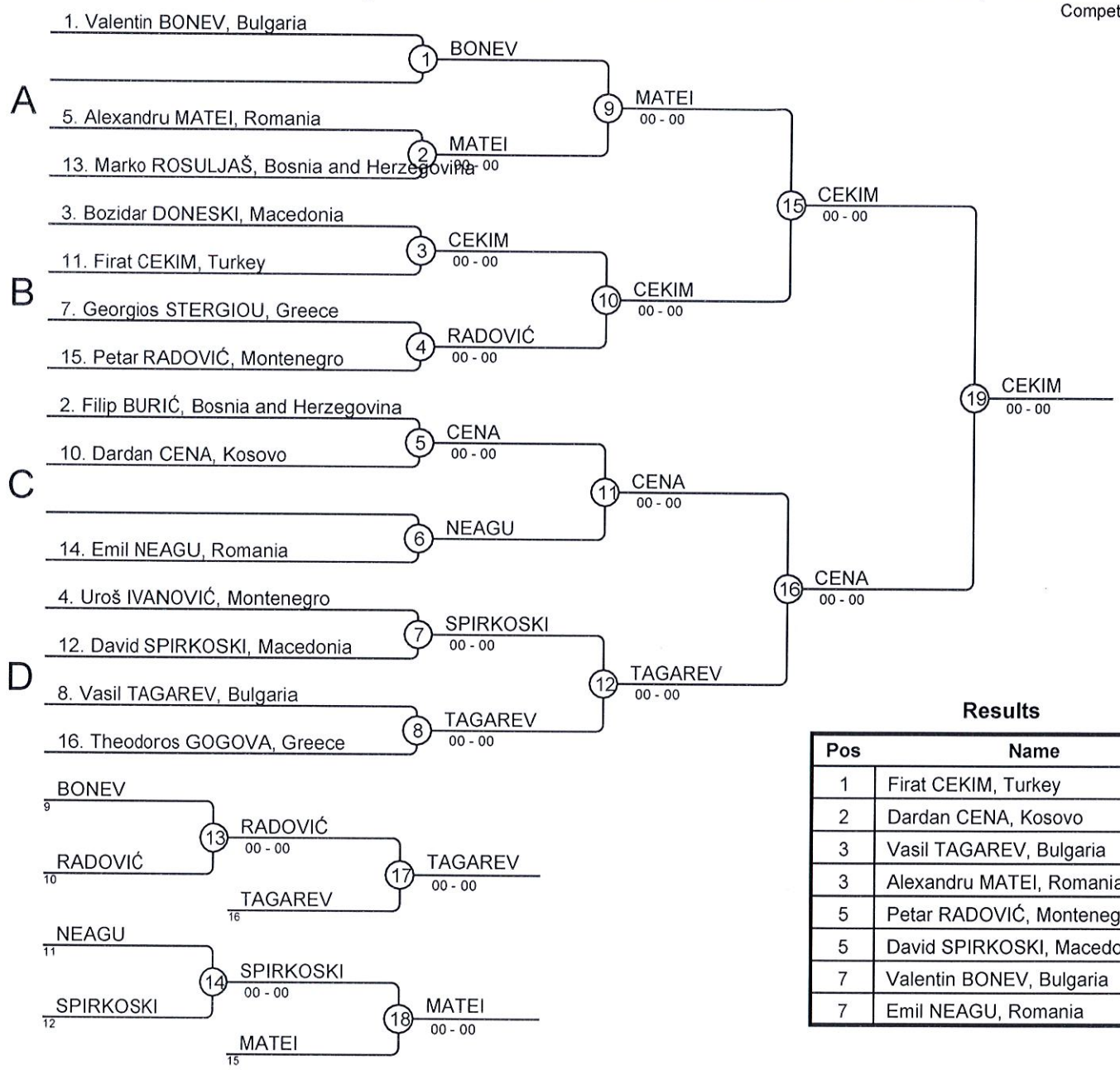

Results

Pos	Name
1	Firat CEKIM, Turkey
2	Dardan CENA, Kosovo
3	Vasil TAGAREV, Bulgaria
3	Alexandru MATEI, Romania
5	Petar RADOVIĆ, Montenegro
5	David SPIRKOSKI, Macedonia
7	Valentin BONEV, Bulgaria
7	Emil NEAGU, Romania

BALKAN JUDO ASSOCIATION
Deniz ŞİLLİ
General Secretary

Balkan Championships for cadets 2.3.June.2018 Bihac, BIH M -55 kg

Competitors: 9

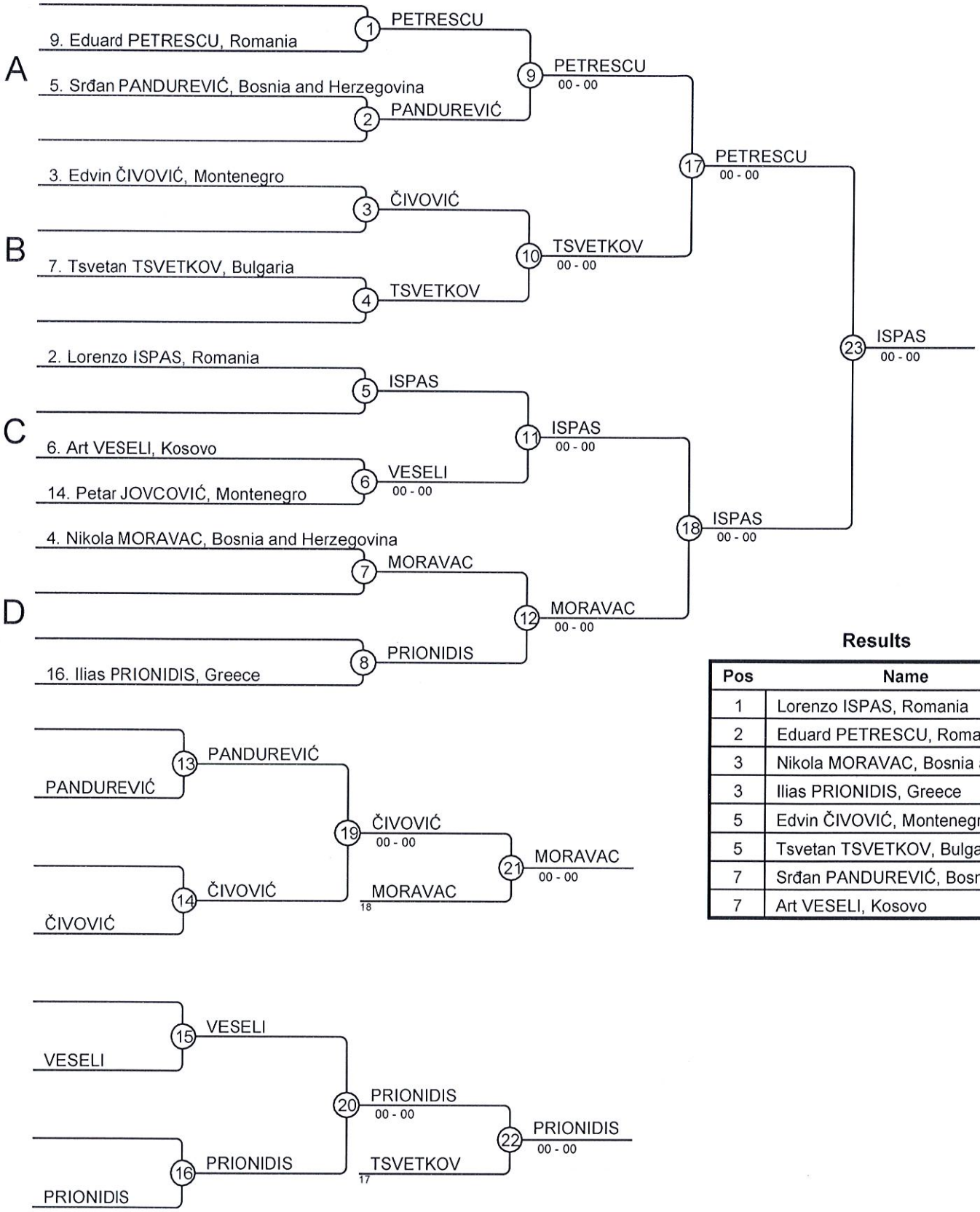

Results

Pos	Name
1	Lorenzo ISPAS, Romania
2	Eduard PETRESCU, Romania
3	Nikola MORAVAC, Bosnia and Herzegovin
3	Ilias PRIONIDIS, Greece
5	Edvin ČIVOVIĆ, Montenegro
5	Tsvetan TSVETKOV, Bulgaria
7	Srđan PANDUREVIĆ, Bosnia and Herzego
7	Art VESELI, Kosovo

BALKAN JUDO ASSOCIATION
Deniz ŞILLI
General Secretary

Balkan Championships for cadets 2.3.June.2018 Bihac, BIH M -60 kg

Competitors: 14

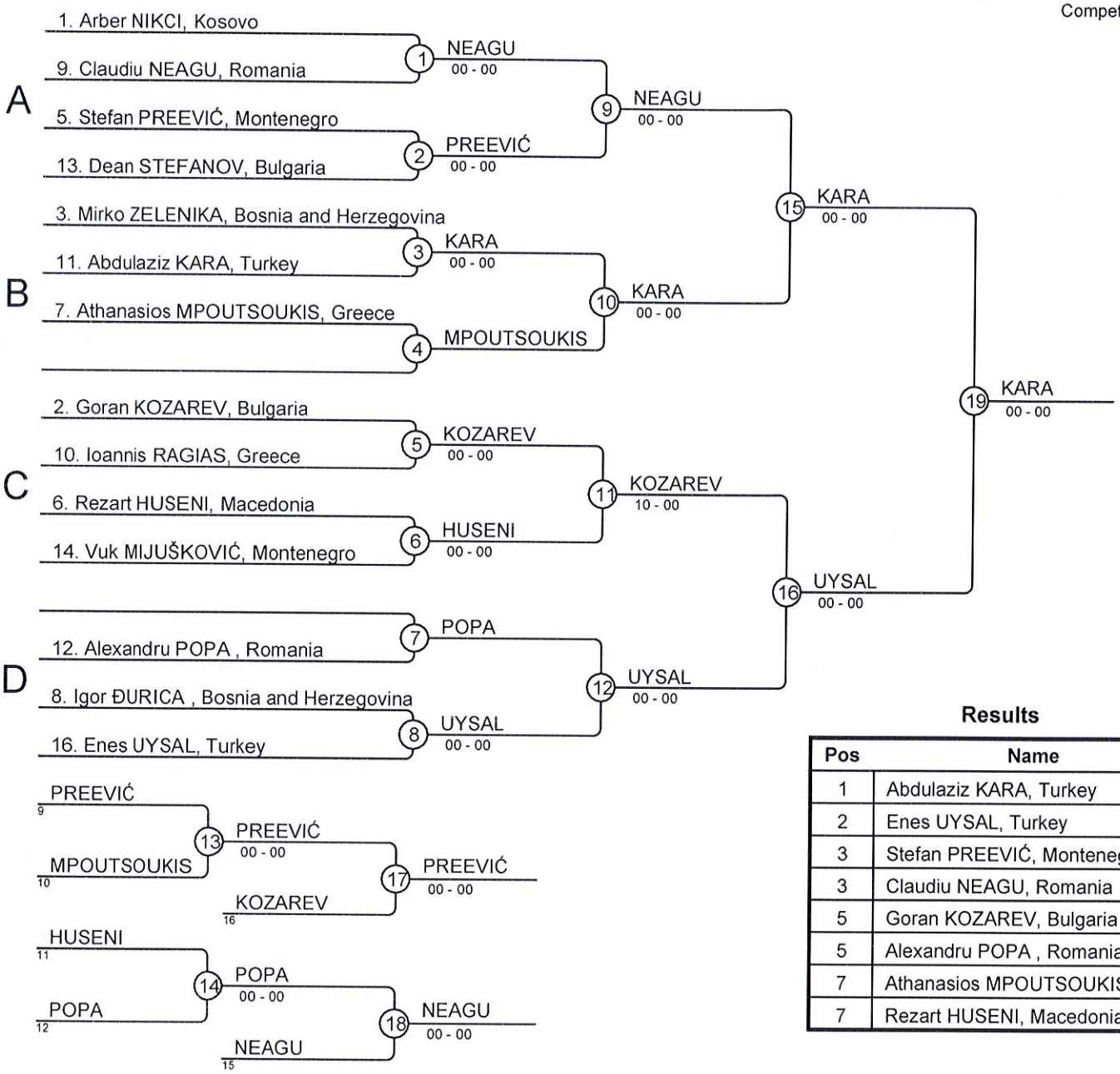

Results

Pos	Name
1	Abdulaziz KARA, Turkey
2	Enes UYSAL, Turkey
3	Stefan PREEVIĆ, Montenegro
3	Claudiu NEAGU, Romania
5	Goran KOZAREV, Bulgaria
5	Alexandru POPA , Romania
7	Athanasios MPOUTSOUKIS, Greece
7	Rezart HUSENI, Macedonia

BALKAN JUDO ASSOCIATION
Deniz ŞİLLİ
General Secretary

Balkan Championships for cadets 2.3.June.2018 Bihac, BIH M -66 kg

Competitors: 13

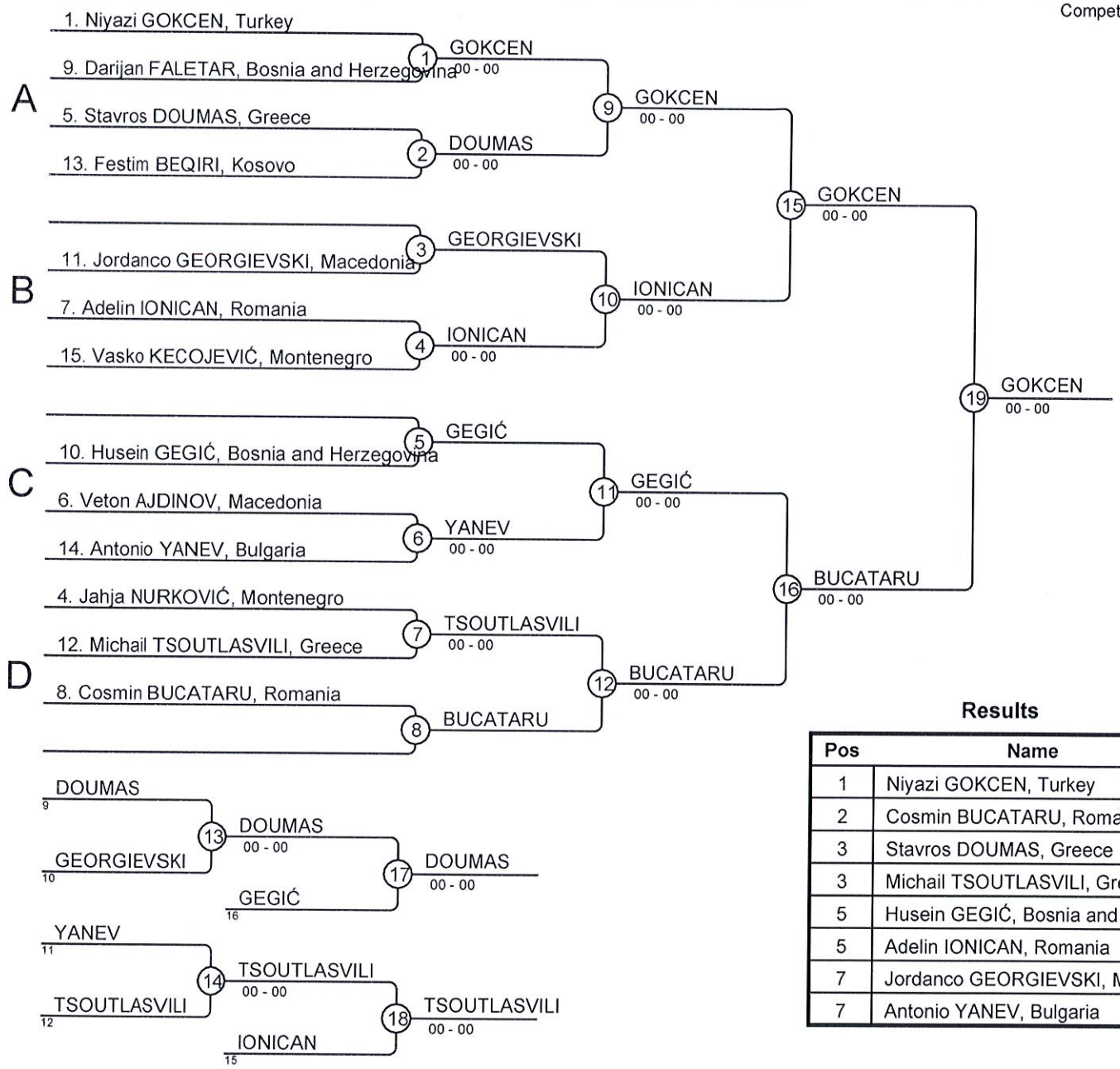

Results

Pos	Name
1	Niyazi GOKCEN, Turkey
2	Cosmin BUCATARU, Romania
3	Stavros DOUMAS, Greece
3	Michail TSOUTLASVILI, Greece
5	Husein GEGIĆ, Bosnia and Herzegovina
5	Adelin IONICAN, Romania
7	Jordanco GEORGIEVSKI, Macedonia
7	Antonio YANEV, Bulgaria

BALKAN JUDO ASSOCIATION
Deniz ŞİLLİ
General Secretary

Balkan Championships for cadets 2.3.June.2018 Bihac, BIH M-73 kg

Competitors: 14

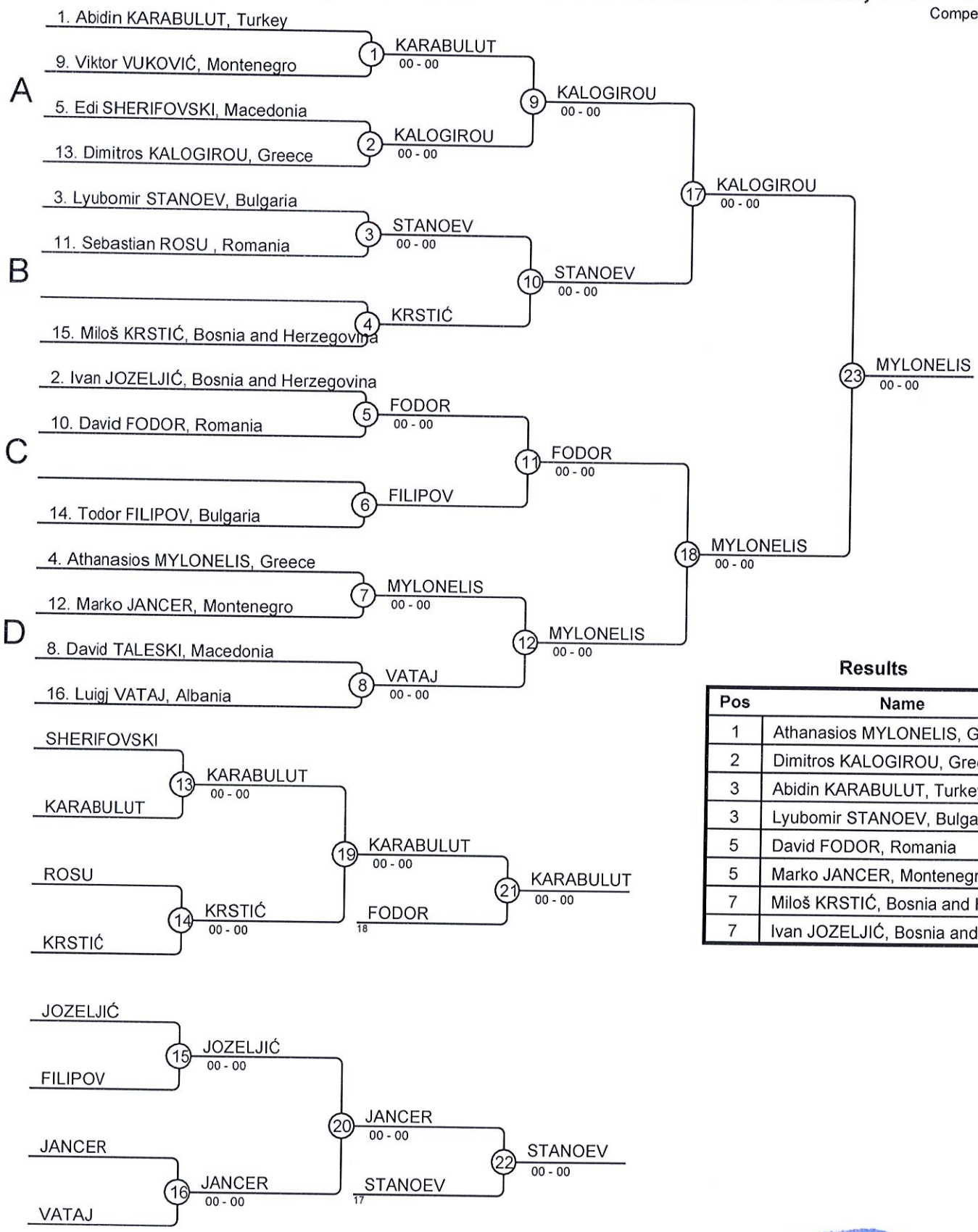

Results

Pos	Name
1	Athanasios MYLONELIS, Greece
2	Dimitros KALOGIROU, Greece
3	Abidin KARABULUT, Turkey
3	Lyubomir STANOEV, Bulgaria
5	David FODOR, Romania
5	Marko JANCER, Montenegro
7	Miloš KRSTIĆ, Bosnia and Herzegovina
7	Ivan JOZELJIĆ, Bosnia and Herzegovina

BALKAN JUDO ASSOCIATION
Deniz ŞILLI
General Secretary

Balkan Championships for cadets 2.3.June.2018 Bihac, BIH M -81 kg

Competitors: 12

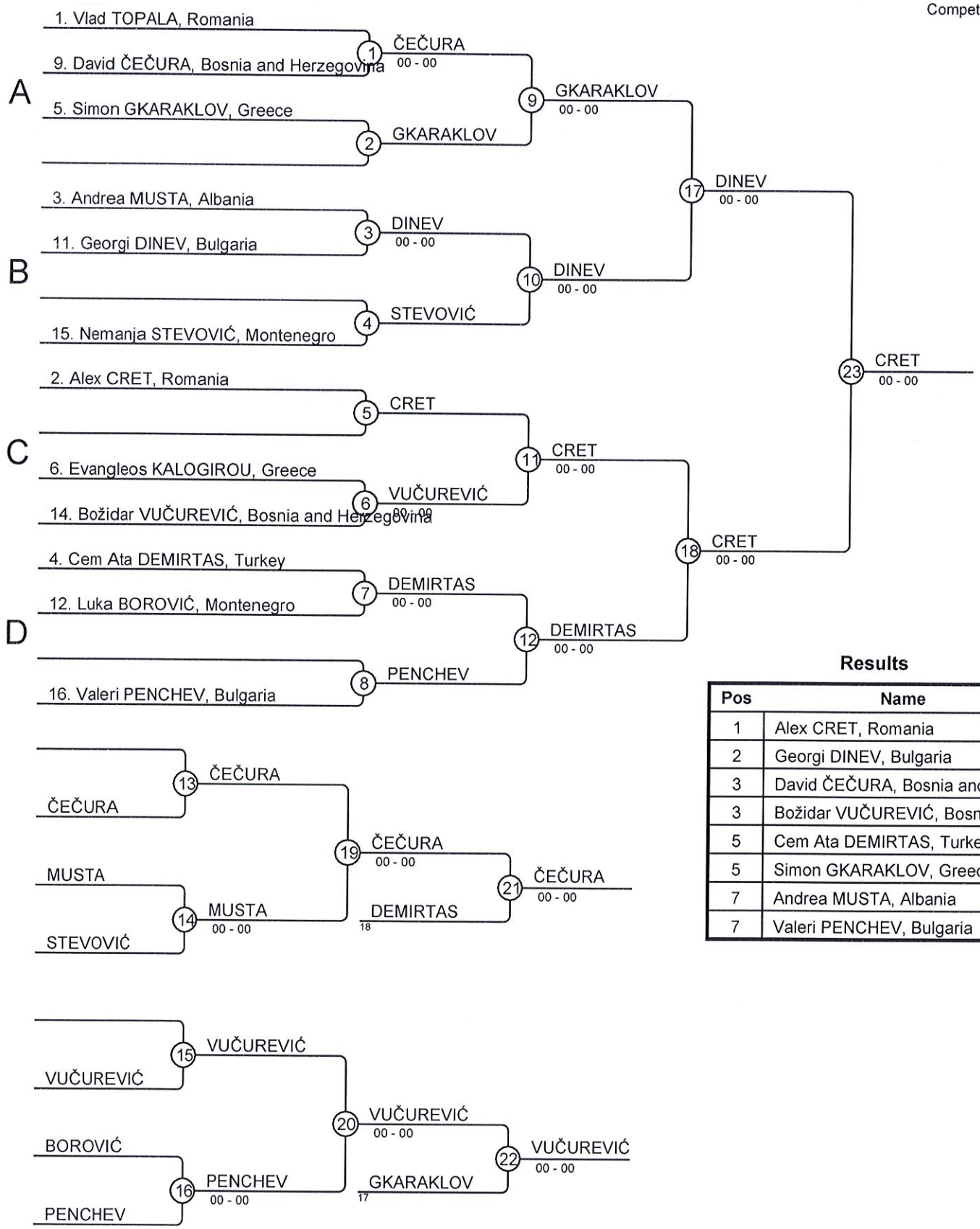

Results

Pos	Name
1	Alex CRET, Romania
2	Georgi DINEV, Bulgaria
3	David ČEČURA, Bosnia and Herzegovina
3	Božidar VUČUREVIĆ, Bosnia and Herzego
5	Cem Ata DEMIRTAS, Turkey
5	Simon GKARAKLOV, Greece
7	Andrea MUSTA, Albania
7	Valeri PENCHEV, Bulgaria

BALKAN JUDO ASSOCIATION
Deniz ŞİLLİ
General Secretary

Balkan Championships for cadets 2.3.June.2018 Bihac, BIH M -90 kg

Competitors: 11

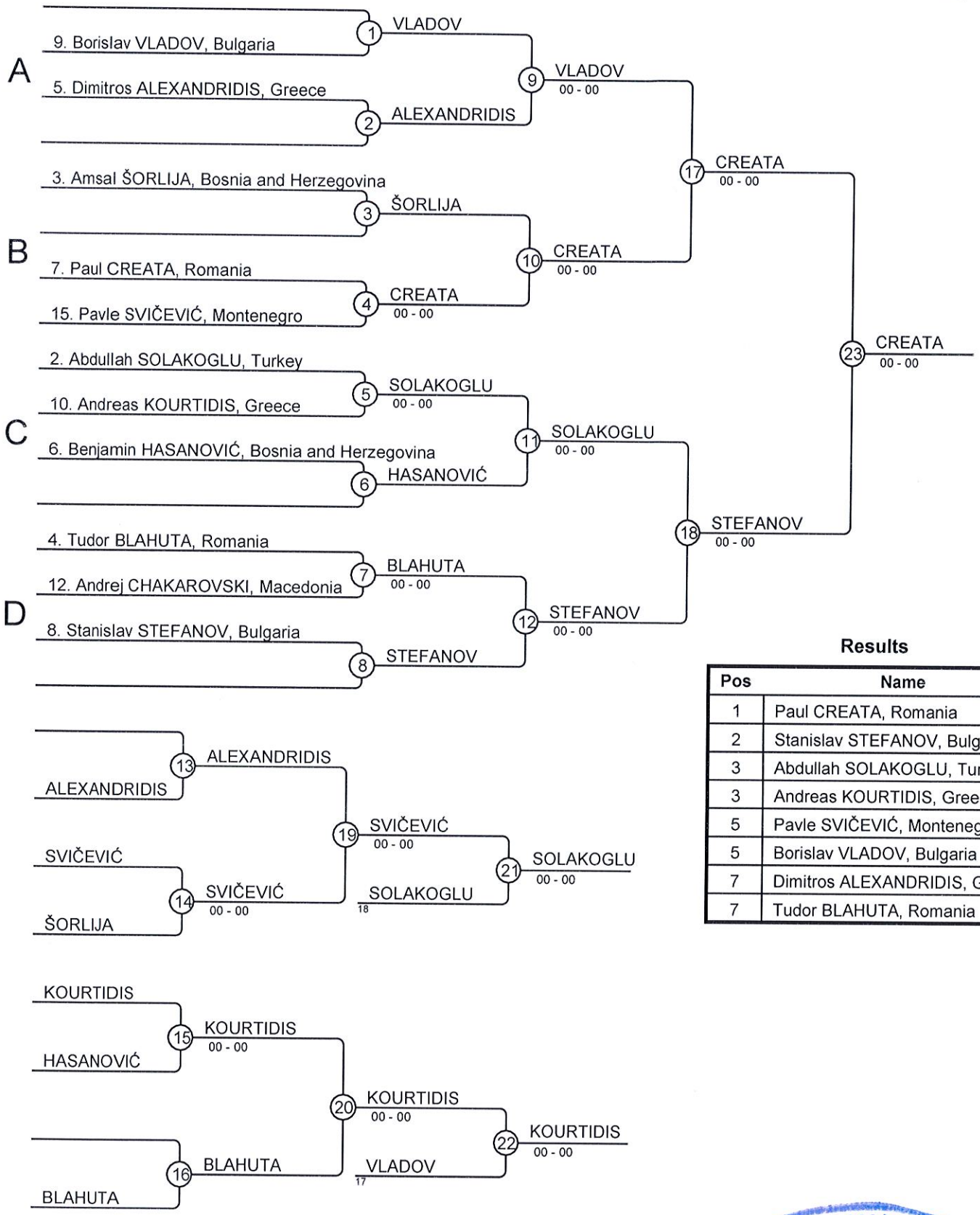

Results

Pos	Name
1	Paul CREATA, Romania
2	Stanislav STEFANOV, Bulgaria
3	Abdullah SOLAKOGLU, Turkey
3	Andreas KOURTIDIS, Greece
5	Pavle SVIČEVIĆ, Montenegro
5	Borislav VLADOV, Bulgaria
7	Dimitros ALEXANDRIDIS, Greece
7	Tudor BLAHUTA, Romania

BALKAN JUDO ASSOCIATION
Deniz ŞILLI
General Secretary

Balkan Championships for cadets 2.3.June.2018 Bihac, BIH M +90 kg

Competitors: 10

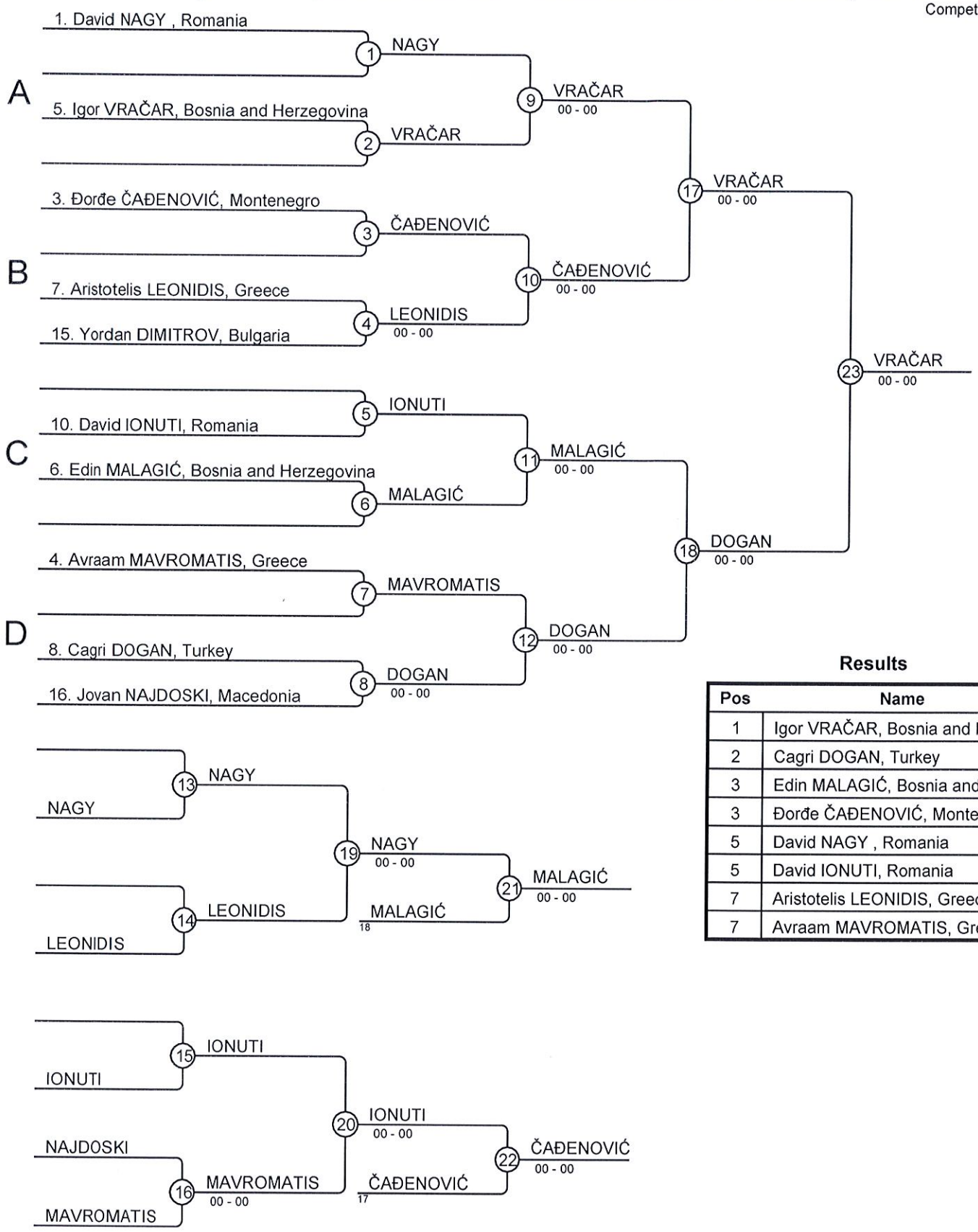

Results

Pos	Name
1	Igor VRAČAR, Bosnia and Herzegovina
2	Cagri DOGAN, Turkey
3	Edin MALAGIĆ, Bosnia and Herzegovina
3	Đorđe ČAĐENOVIĆ, Montenegro
5	David NAGY , Romania
5	David IONUTI, Romania
7	Aristotelis LEONIDIS, Greece
7	Avraam MAVROMATIS, Greece

BALKAN JUDO ASSOCIATION
Deniz ŞİLLİ
General Secretary